ITEM NO.	PART NUMBER	DESCRIPTION	Material	QTY.
1	BF-02-0130-04	Double Bale Feeder Cradel Pivot Boss	65 Dia Hollow Bar	1

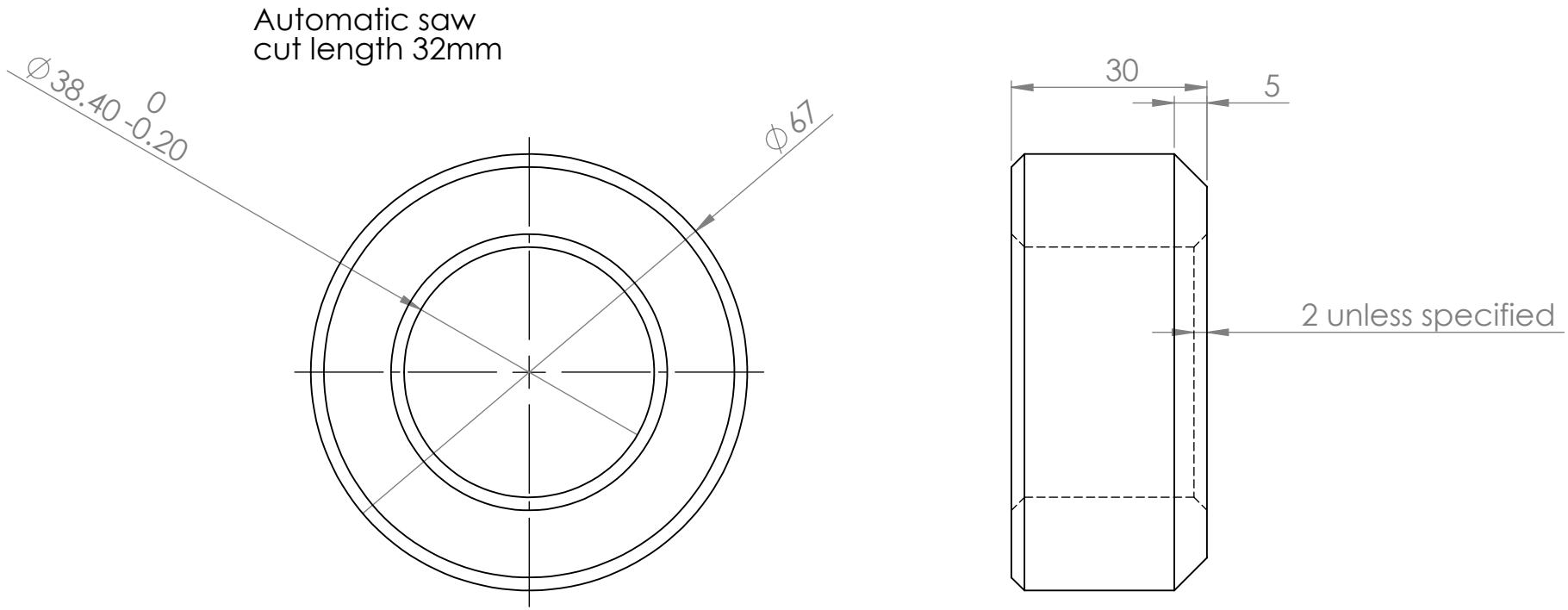

UNLESS OTHERWISE SPECIFIED:
DIMENSIONS ARE IN MILLIMETERS
SURFACE FINISH:
TOLERANCES:
LINEAR:
ANGULAR:

FINISH: see drawing

DEBURR AND BREAK SHARP EDGES

DO NOT SCALE DRAWING

REVISION

	NAME	SIGNATURE	DATE
DRAWN			
CHK'D			
APPV'D			
MFG			
Q.A			

TITLE:

Double Bale Feeder Cradel Pivot Boss

MATERIAL: 65 Dia Hollow Bar

WEIGHT: 0.5

DWG NO. BF-02-0130-04

A4

SCALE:1:1

SHEET 1 OF 1