Manufacture Part No: LC-99-0009-01 Bin Location:17 Weight: 4.372 Kg Surface Area: 0.071 M2 Last Revision Date:20/11/2015

63MM LOAD CELL BOSS - SMALL

Material: **Purchase Part**

Mat Cut Size: **Purchase Part**

Quantity: **04 off per unit**

Manuf. Finish: **Remove all sharp edges**

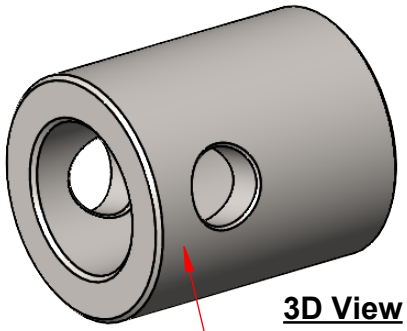

3D View

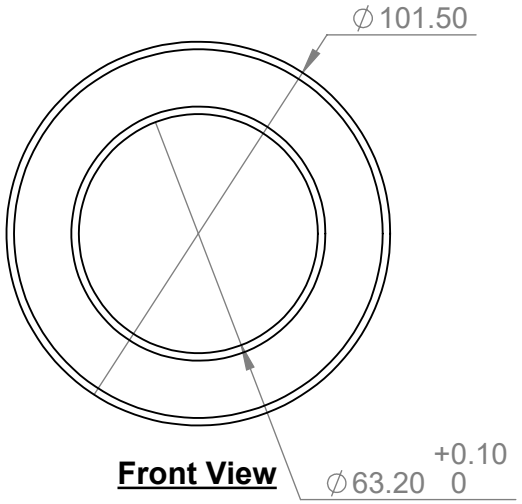

Front View

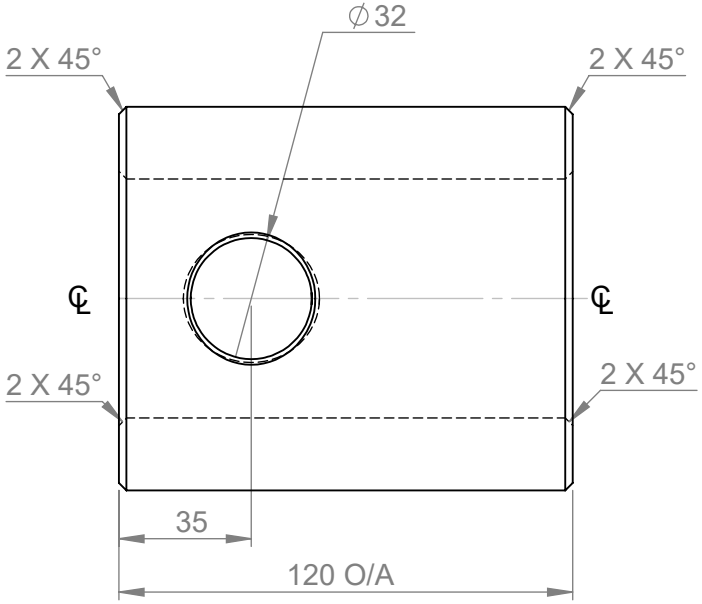

Side View

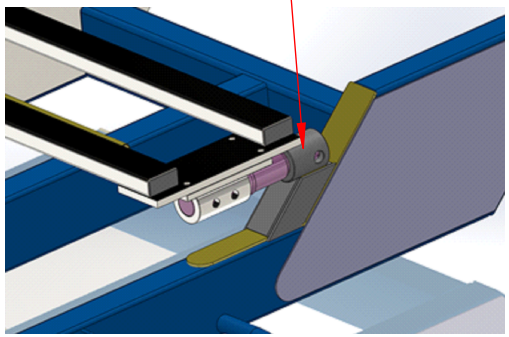

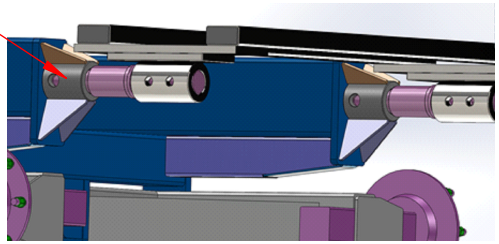

PART NUMBER: LC-99-0009
(Use This No for Time Sheets)

Manufacture Process:**Purchase Part**

Scale		Units	Jig #	Press #	Template #	Drawn	
N.T.S	+/-0.2	mm	-	-	-	MF	**Loadcell Boss 63mm Small**

McIntosh Brothers Engineering L.t.d
P.O Box 4240, Palmerston North.
Telephone: (06 356-7056) Fax: (06 356-7055)
Web: www.mcintoshfarmmacinery.co.nz

Date 02.11.11

LC-99-0009-01 A4

SHEET 1 OF 1

Assembly Location: **Multicrop Wagon Chassis Front & Rear**

Previous Drawing No: MC-08-0028-01 Supplier PN:- Supplier: ITEC