REVSION	DATE

Material :Bright Bar: 1"Round CD 4140

Material Cut Size:55mm Long

Quantity: 02 off per Unit (in Total)

Finish: Remove all sharp edges

Manufacture: Automatic Saw

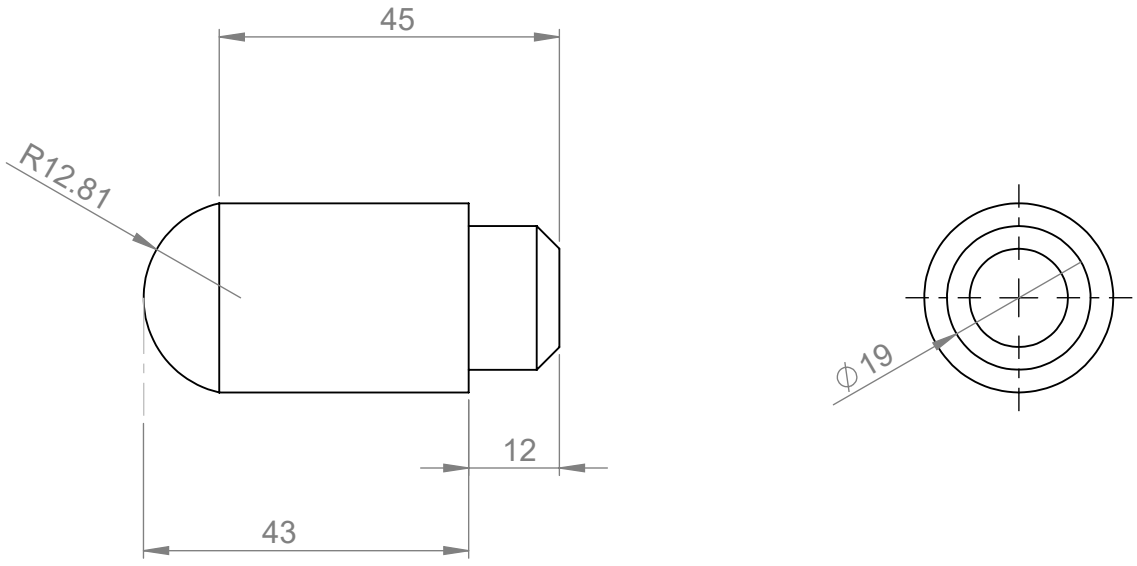

3D View

Scale		Units	Jig #	Press #	Template #	Drawn	
N.T.S	+/-1.0	mm	-	-	-	MF	Bale Feeder Drive Sprocket Locator

McIntosh Brothers Engineering L.t.d
P.O Box 4240, Palmerston North.
Telephone: (06 356-7056) Fax: (06 356-7055)
Web: www.mcintosh.net.nz

Date 22/12/10

BF-04-0024-06

A4

AREA:

WEIGHT: 0.174 Kg

SHEET 1 OF 1