Manufacture Part No: **MC990026** Bin Location: **17** Weight: **6.831 Kg** Surface Area: **0.103 M2** Last Revision Date: **22/08/2014**

63MM LOAD CELL BOSS - LARGE

Material: **Purchase Part**

Mat Cut Size: **Purchase Part**

Quantity: **02 off per unit**

Manuf. Finish: **Remove all sharp edges**

Surface Finish: **-**

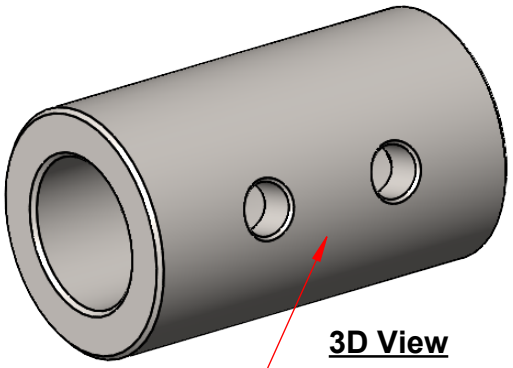

3D View

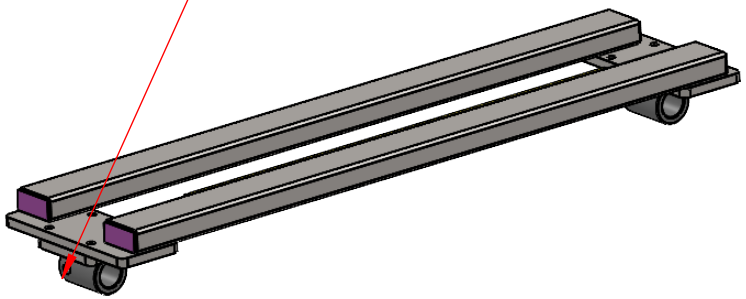

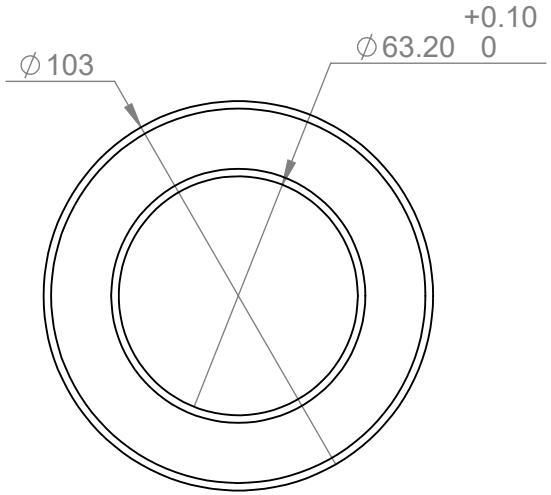

Front View

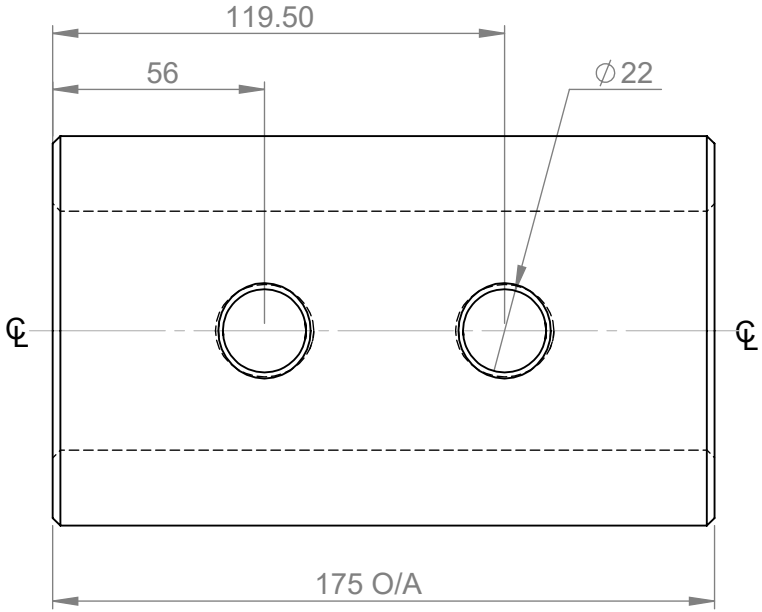

Side View

PART NUMBER: **MC990026**
(Use This No for Time Sheets)

Manufacture Process: **Purchase Part**

Scale		Units	Jig #	Press #	Template #	Drawn	
N.T.S	+/-0.5	mm	-	-	-	CG	**Load Cell Boss 63mm Large**

Assembly Location: **63mm Load Cell Mount Assemblies**

McIntosh Brothers Engineering L.t.d
P.O Box 4240, Palmerston North.
Telephone: (06 356-7056) Fax: (06 356-7055)
Web: www.mcintoshfarmmacinery.co.nz

Date 02.11.11

LC-99-0005-01 A4

SHEET 1 OF 1

Previous Drawing No: **MC-08-0023-01** Supplier PN: **050-0034 979-0182** Supplier: **ITEC Products**